Tresham®

Trip Lever

K-9375

Features

- Premium metal construction for durability.
- KOHLER finishes resist corrosion and tarnish.
- For use with the K-3950 Tresham two-piece toilet.
- Coordinates with other products in the Tresham Collection.

ADA	CSA B651	OBC

Codes/Standards

ASME A112.18.1/CSA B125.1
ADA
ICC/ANSI A117.1
CSA B651
OBC

KOHLER® One-Year Limited Warranty

See website for detailed warranty information.

Available Color/Finishes

Color tiles intended for reference only.

Color	Code	Description
	SN	Vibrant® Polished Nickel
	AF	Vibrant® French Gold
	BN	Vibrant® Brushed Nickel
	BV	Vibrant® Brushed Bronze
	2BZ	Oil-Rubbed Bronze
	VNT	Vintage Nickel

Tresham®

Trip Lever

K-9375

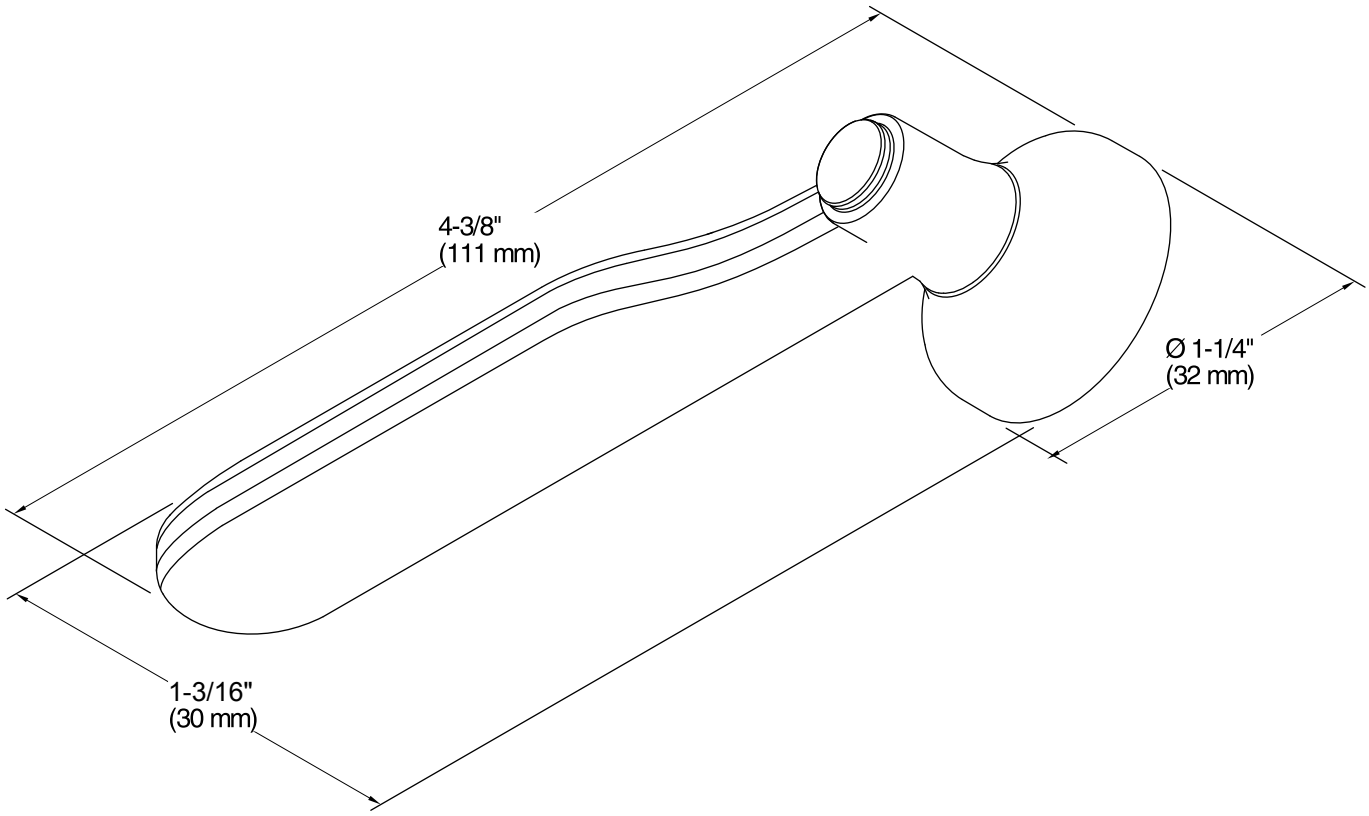

Technical Information

All product dimensions are nominal.

Notes

ADA, OBC, CSA B651 compliant when installed to the specific requirements of these regulations.